SCHEDA TECNICA

BANDELLA DRITTA ZANCA LUNGA D 12 8226 OMAD

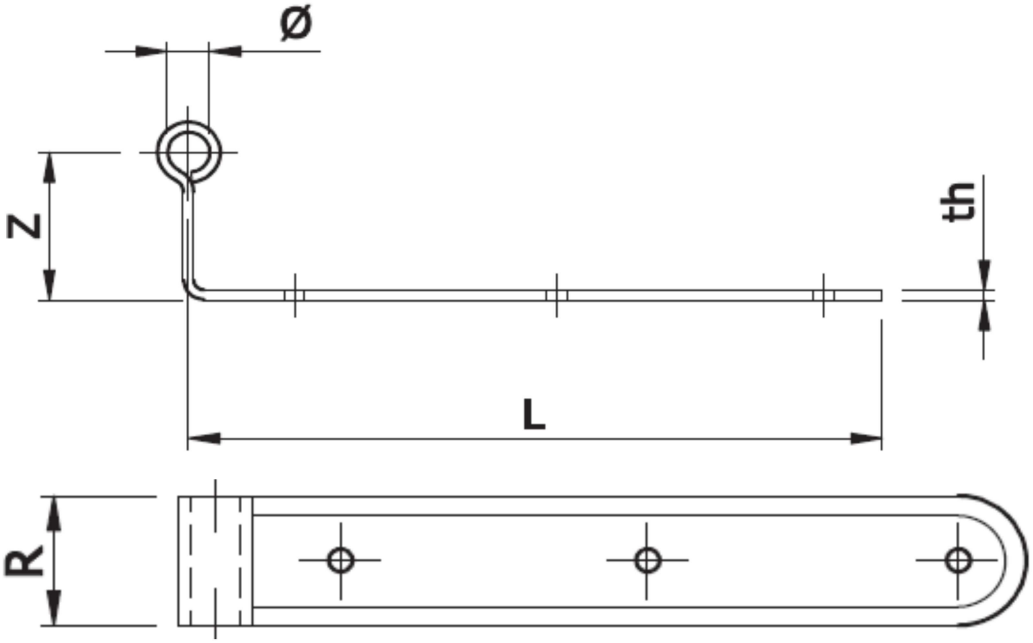

Articolo	Ø	L	R	th	Z	N.fori
BANDELLE DRITTE Ø12 - Zanca corta, media, lunga						
_2260020L#	12	19	35	3	60	3
_2260025L#	12	24	35	3	60	4
_2260030L#	12	29	35	3	60	4
_2260021L#	12	19	40	4	60	3
_2260026L#	12	24,5	40	4	60	4
_2260031L#	12	29	40	4	60	4
_2260035L#	12	34,5	40	4	60	4
_2260040L#	12	39,5	40	4	60	4
_2260045L#	12	44,5	40	4	60	5
_2260055L#	12	54,5	40	4	60	5

WWW.FERRAMENTAPARIDE.IT