OPERA
OPERATING ACCESS

PASSACAVO ART. 08600

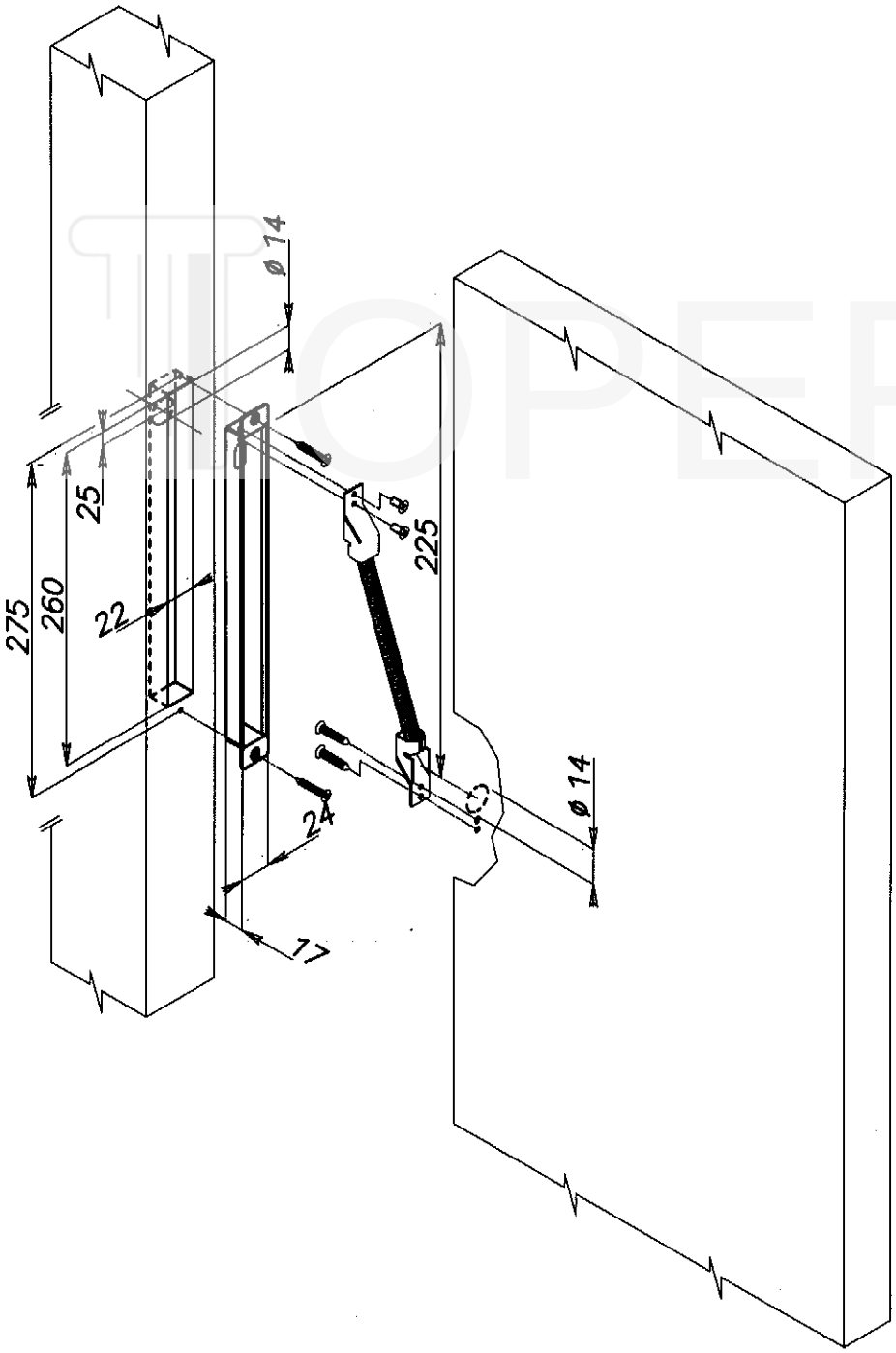

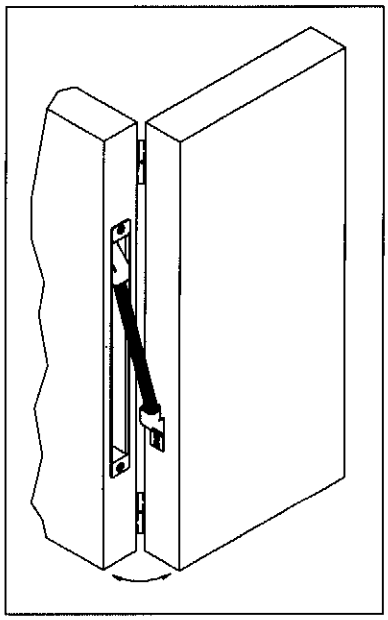

OPERA s.r.l. – via Somalia 15/17 – 41100 MODENA – ITALIA – Tel. 059/45.17.08 – Fax 059/45.16.97